Formula Technion Racing Team

2014 Formula Technion

Fuel System Team

Design of a New Product Course #034353/4

Members: Saeed Matar, Waleed Fatfot, Evgeny Guy.

Client: Nimrod Meller.

Advisor: Dr. Zvi Fruchter.

Abstract

The Fuel System:

Technion's FSAE racing car of this year is becoming more advanced than last year's car in many aspects, and one of these aspects is the "Fuel system" . The main goal was to ensure proper and fast responding fuel supply at all different power demands. The pump supplied a common rail to which the injectors where attached. The fuel tank had to ensure proper fuel supply to the pump under lateral and longitude acceleration. Therefore a check valve system was designed.

The fuel system contains: Tank, Fuel pump, Filter, Pressure regulator, Fittings and Pipes.

The fuel system is located between the driver's seat and the motor, and it is connected with the chassis with brackets which are designed especially for the task. The pipes are delivering the fuel to the injectors rail that is connected to the fuel system.

Hydraulic Diagram

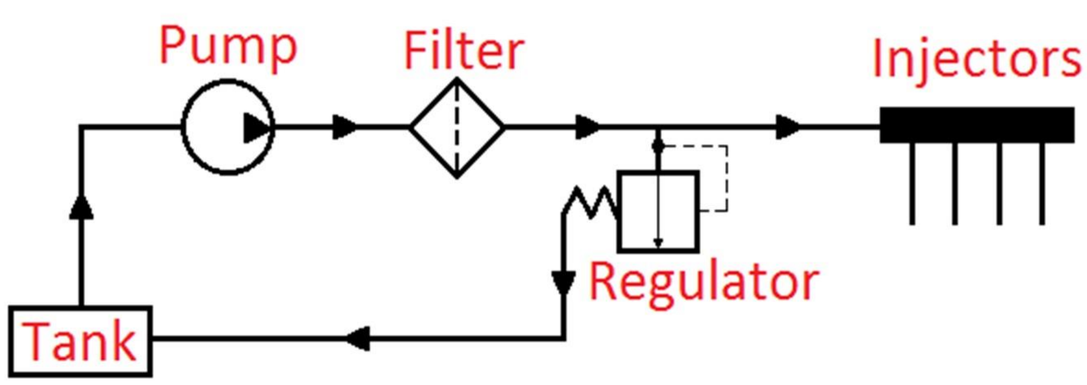

How the System Works

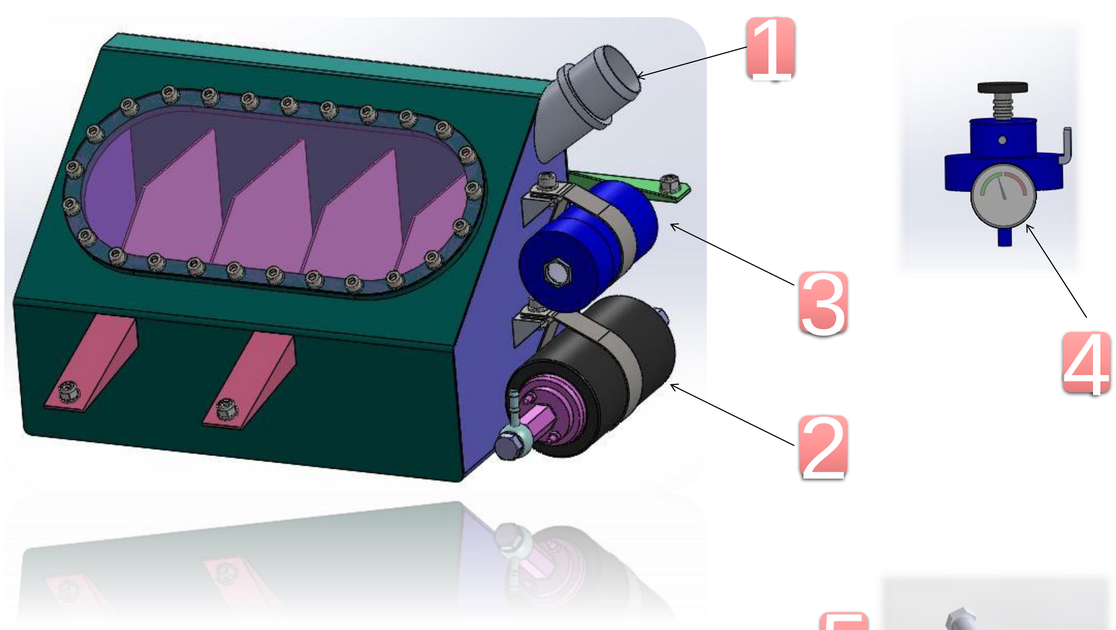

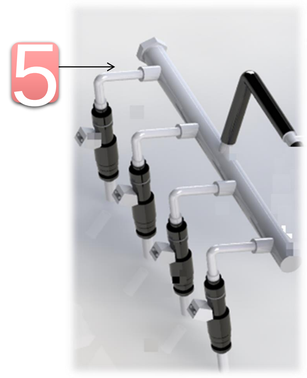

1. Filling Neck
2. In Line Fuel Pump
3. Fuel Filter
4. Manifold Vacuum controlled pressure regulator
5. Fuel rail and injectors

Challenges and Risks

When designing the system we had to faced two main issues:

1- The Sloshing Phenomena: the movement and dynamics of the fluids inside tanks.

2- Isolation of the fuel tank to prevent fuel heating caused by the exhaust manifold.

Solution:

The Sloshing was prevented using one way valves placed between the separated chambers in the fuel tank. All the fuel was directed to the last chamber where the pump was connected.

On the outer shell of the tank a heat insulation was placed to prevent fuel heating from the exhaust manifold.

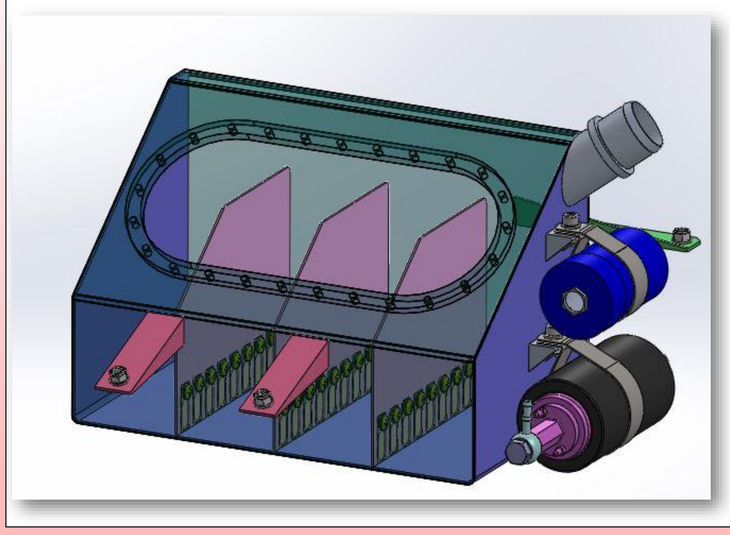

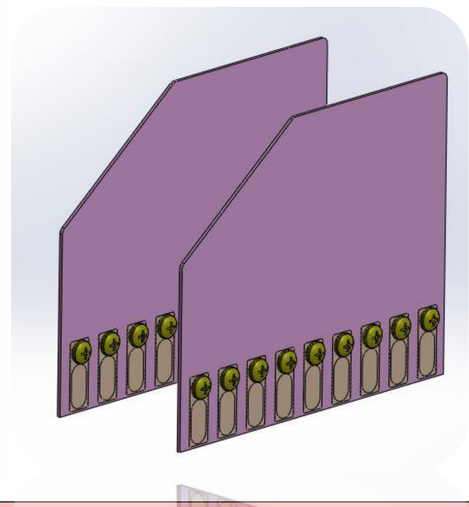

Final Product

Special thanks to:

Prof. Reuven Katz & Faculty of Mechanical engineering, Dr. Leonid Tartakovski, Prof. Gideon Grader & G-TEP Program, Nimrod Meller, Yaacov Hauzer, Lea Stern, Kfir Cohen, Svetlana Luski ,Moshe Golan, Yosi Cohen, Zeev Hershkovitz, and many others for their support and assistance with this project